Specification for:

00B140802

110 Delta Drive
Pittsburgh, PA 15238
Phone: 412/696-1333
Fax: 412/696-0333
Email:magnetics@spang.com

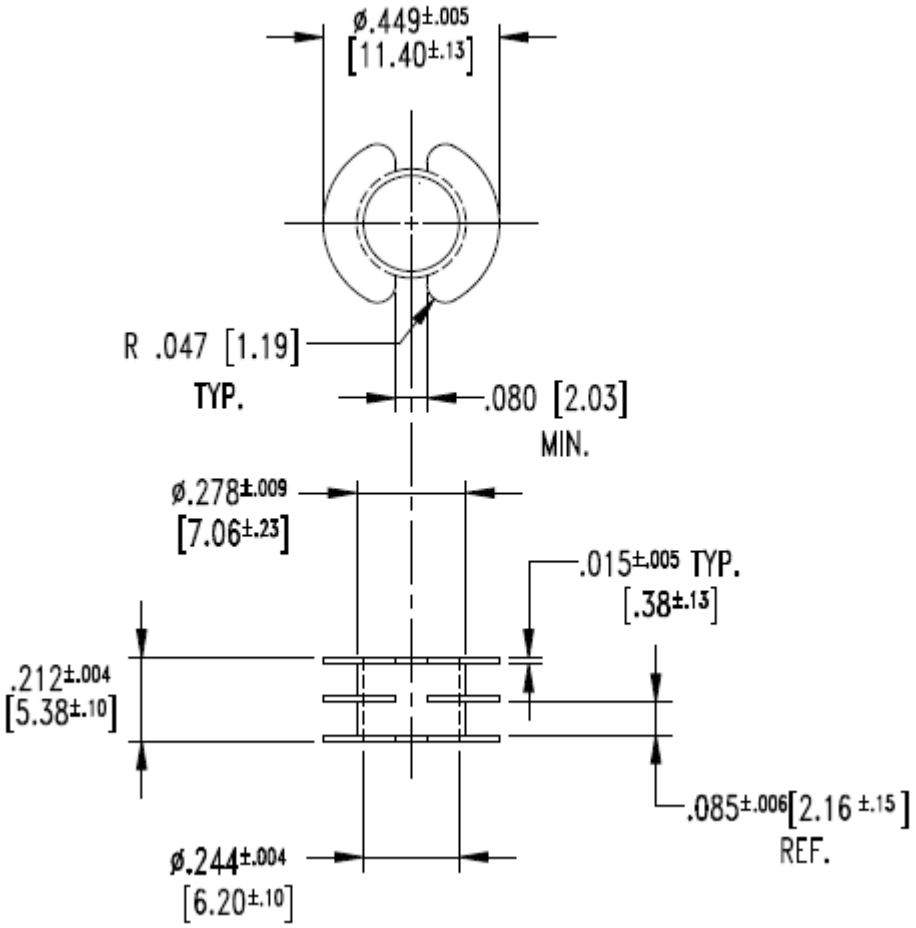

MATERIAL

Material: Delrin

REMARKS

14/08 Bobbin Revision D

Revision 10/10/2013