A Division of Spang & Company

Specification for:

PCB2616TA

110 Delta Drive
Pittsburgh, PA 15238
Phone: 412/696-1333
Fax: 412/696-0333
Email:magnetics@spang.com

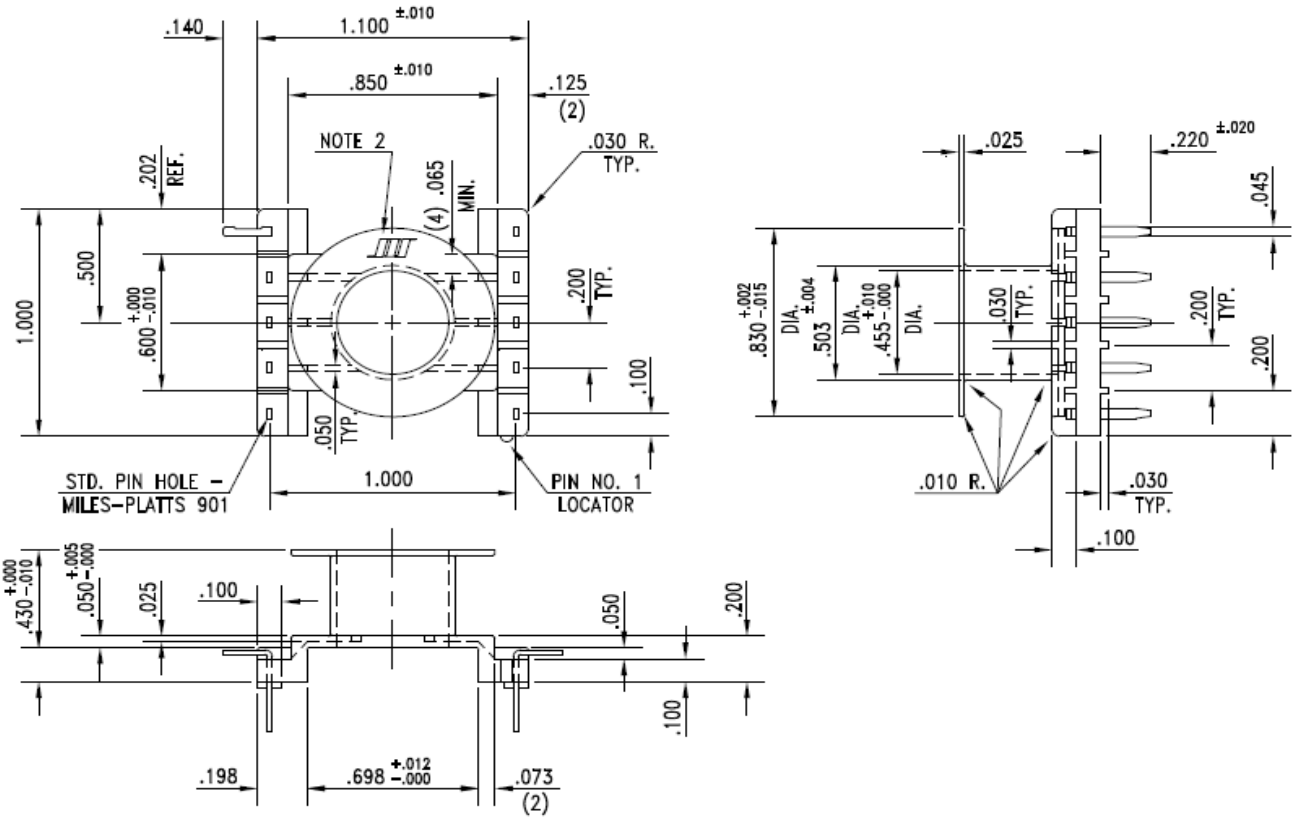

MATERIAL

Material: DuPont Rynite FR530; UL File Number E41938

REMARKS

Note 2: Parts to be stamped with Magnetics' logo (Max HT 5/64")

Revision A